DRAWING: 3-0420

72HR TANK
JD250, JD275, JD300
VD250,VD300 (FT4 & 01)
TD250,TD275, TD300
LV0/LV1/LV2/LV3

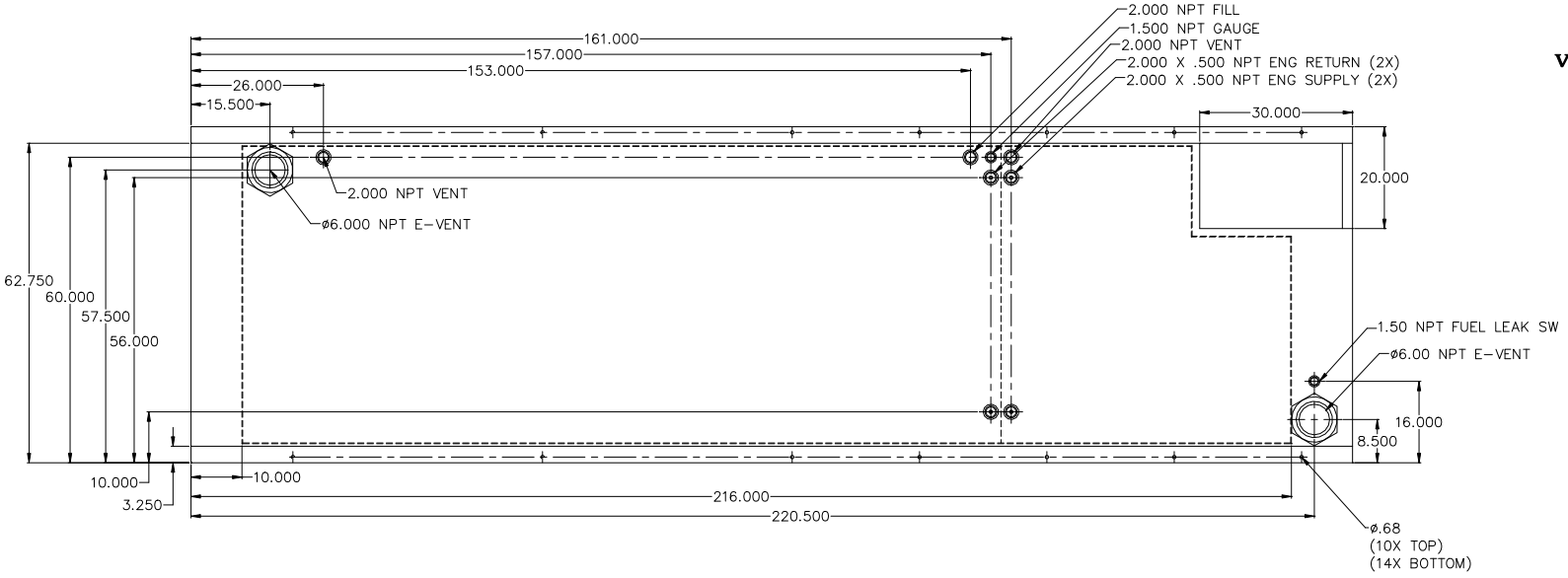

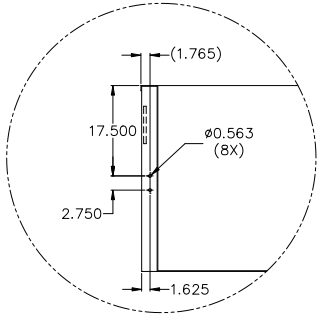

STEP HOLE DETAIL

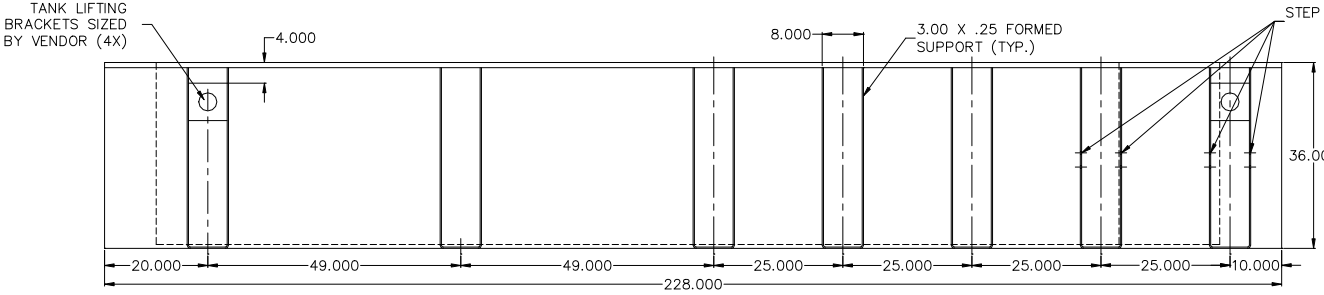

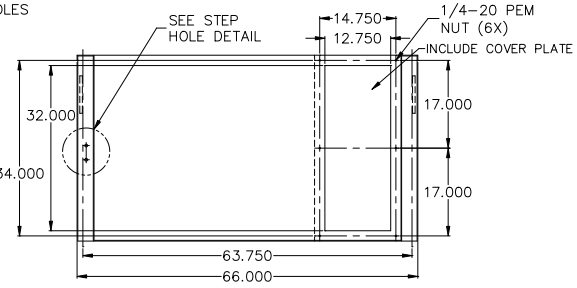

NOTES:
1. MATERIAL: 10GA
2. SECONDARY CONTAINMENT TANK
3. FINISH PAINT GLOSS BLACK

APPROXIMATE WEIGHT: 3600 LBS

REVISIONS:			
LEVEL:	DESCRIPTION:	DATE:	BY:
NA	NA	NA	NA

BLUE STAR
Power Systems Inc.

TANK SB 1620GL DW UL W/STUB-UP

P/N: NA	228"L X 66"W X 36"H	
DATE: 12-21-15	BY: KDH	DRAWN TO SCALE